SATRON VB Pressure Transmitter

SATRON VB pressure transmitter belongs to the series V transmitters.
SATRON VB is user-friendly, through the ball valve mounted transmitter which is used for 0-4 kPa ... 0-3 MPa ranges.
The transmitter communicates in a 2-wire system.
In pressure measuring applications SATRON VB transmitter is used for measuring the pressure of gases, steams and sedimenting, crystallizing and sticking liquids. The transmitter's sensor is piezoresistive. The rangeability of the model VB6 is 100:1. The transmitter communicates digitally using the HART® protocol.

TECHNICAL SPECIFICATIONS

Measuring range and span
See Selection Chart.

Zero and Span adjustment
Zero elevation: Calibrated span is freely selectable on the specified range depending from the desired option. This can be made by using a HART®275/375 communicator.

Damping
- Time constant is continuously adjustable from 0.01 to 60 s.

Response time
Maximum 100 ms

Temperature limits
Ambient: -30 to +80 °C
Process: -30 to +125 °C
Shipping and storage: -40 to +80 °C
Operating temperature of display: 0 to +50ºC *(does not affect operation of the transmitter)*

Pressure limits
Min. and max. process pressure:
See the appended tables.

Volumetric displacement
< 0.5 mm^3/max. span

Output 2-wire (2W), 4-20 mA, user selectable for linear, square root, inverted signal or the transfer function (16 points) specified by the user.

Supply voltage and permissible load
See the load capacity diagram;
4-20 mA output: 12 - 35 VDC.

Humidity limits
0-100 % RH; freezing of condensed water is not allowed in reference pressure channels.

PERFORMANCE SPECIFICATIONS
Tested in accordance with IEC 60770:
Reference conditions, specified span, no range elevation, horizontal mounting; O-ring seals, AISI316L diaphragm, silicone oil fill.

Accuracy
±0.1 % of calibrated span
(span 1:1 - 7.5:1 /max.range).
On the measuring ranges 7.5:1 - 100:1:
$\pm[0.025+0.010 \times (\frac{\text{max.span}}{\text{calibrated span}})]\%$ of calibrated span
(incl. nonlinearity, hysteresis and repeatability)

Long-term stability
±0.1 % / max. span / 12 months

Temperature effect on compensated temperature ranges -20...+80 °C:
Zero and span error, types VB5 and VB6: ±0.15 % of max.span.

Zero and span error, type VB4: ±0.25 % of max.span

Mounting position effect (**VB4** ... **VB6**)
Zero error < 0.15 kPa which can be calibrated out.

Vibration effect (IEC 68-2-6: FC):
±0.1 % of measuring range/
2g/10 to 2000 Hz
4g/10 to 100 Hz

Power supply effect
< ±0.01 % of calibrated span per volt

European Directive Information
European Pressure Equipment Directive (PED) (97/23/EY)
- Sound Engineering Practice
Electro Magnetic Compatibility (EMC directive 2004/108/EC)
-All pressure transmitters

Insulation test voltage
500 V rms 50 Hz

CONSTRUCTION
Wetted materials: AISI316L (EN 1.4404 and EN 1.4435)
Other materials: AISI316L, AISI303

Housing with PLUG connector,
housing type code **H**
Housing: AISI303/316
Seals: Viton® and NBR
TEST jacks: MS358Sn/PVDF, protected with silicone rubber shield.
PLUG connector: PA6-GF30 jacket, Silicone rubber seal, AISI316 retaining screw.

Housing with junction box/terminal strip, housing type codes **M** and **N**
Housing: AISI303/316; Seals: Nitrile and Viton®; Nameplates: Polyester

Filling fluid: Silicone oil or inert oil

Enclosure class IP66

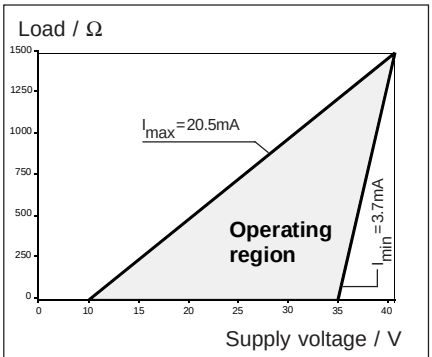

$R_{max} = \frac{\text{Supply voltage - 10V}}{I_{max}}$

I_{max} = 20.5mA using HART®-communication

I_{max} = 23mA (when the alarm current 22.5mA is on)

Pressure limits

Maximum process pressure, MPa

Transmitter type	Max. overload. pressure, **MPa**	Pressure class
VB4 VB5 VB6	0.3 1.5 7.5	PN40 PN40 PN100

Minimum process pressure

$T_{proc.}$ °C	Minimimum pressure for different fill fluid (**kPa**, abs.) DC200 100 cSt	Inert oil
20 40 80 120	5 8 16 21	8 10 28 53

Satron Instruments Inc., P.O.Box 22, FI-33901 Tampere, Finland
Tel. +358 207 464 800, Telefax +358 207 464 801, www.satron.com

Calibration
Transmitter is calibrated for maximum range with 1 sec. damping
Calibration for customer-specified range and item positioning must be mentioned in the order.

Electrical connections
Housing with PLUG connector, code **H**
PLUG connector, connector type DIN 43650 model AF; Pg9 gland for cable; wire cross section 0,5...1,5 mm^2.
Housing with junction box/terminal strip, code **M**
M16x1.5 inlet; screw terminals for
0,5...2,5 mm^2 wires

Product Certifications

European Directive Information

Electro Magnetic Compatibility
(EMC directive 2004/108/EC)
All pressure transmitters

Atex Directive (94/9/EC)
Satron Instruments Inc. complies with the ATEX Directive.

European Pressure Equipment Directive (PED) (97/23/EC)

All Pressure Transmitters :
- Sound Engineering Practice

Hazardous Locations Certifications

European Certifications
ATEX Intrinsic Safety

Certification No. : DNV-2007-OSL-ATEX-1346X

Ex II 1 GD T135°C EEx ia II C T4 -20°C ≤ Tamb ≤ 50°C
Ex II 2 GD T135°C EEx ia II C T4 -20°C ≤ Tamb ≤ 50°C

Input Parameters :
U_i = 28 V
I_i = 93 mA
P_i = 0.651 W
C_i = 5 nF
L_i = 0.2 mH

Special Conditions for Safe Use (X) :
The enclosure with plastic window and the plastic DIN43650 connector must not be installed in potentially explosive atmosphere requiring category 1 apparatus.
The non-conducting surface of the sensor element may be charged by the flow of non-conducting media, so there may be electrostatic hazard with IIC-gases. These units should be marked 2 GD.
The equipment shall be installed and connected according to the manufacturers instructions.

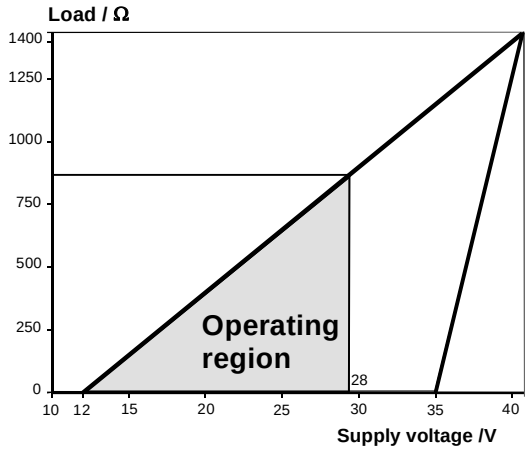

Min. load using HART® - communication 250 Ω

$$R_{max} = \frac{\text{Supply voltage - 12 V}}{I_{max}}$$

I_{max} = 20.5 mA using HART®-communication

I_{max} = 23 mA (when the alarm current 22,5 mA is on)

Supply voltage for transmitter with certified intrinsic safety (ATEX)

Weight
Transmitter

- with housing type **H**:	0.9 kg
- with housing type **M**:	1.4 kg
- with housing type **N**:	1.5 kg

Keyboard :

Esc = Press **Esc** to move back towards the top of the main menu.
▲ = Use the UP arrow key to move up on the current menu level or to increase the selected parameter value.
▼ = Use the DOWN arrow key to move down on the current menu level or to decrease the selected parameter value.
Enter = Press **Enter** to move to a lower level in a menu or to accept a command or parameter value.

Housing with display, code N

Dimensions
(mm)

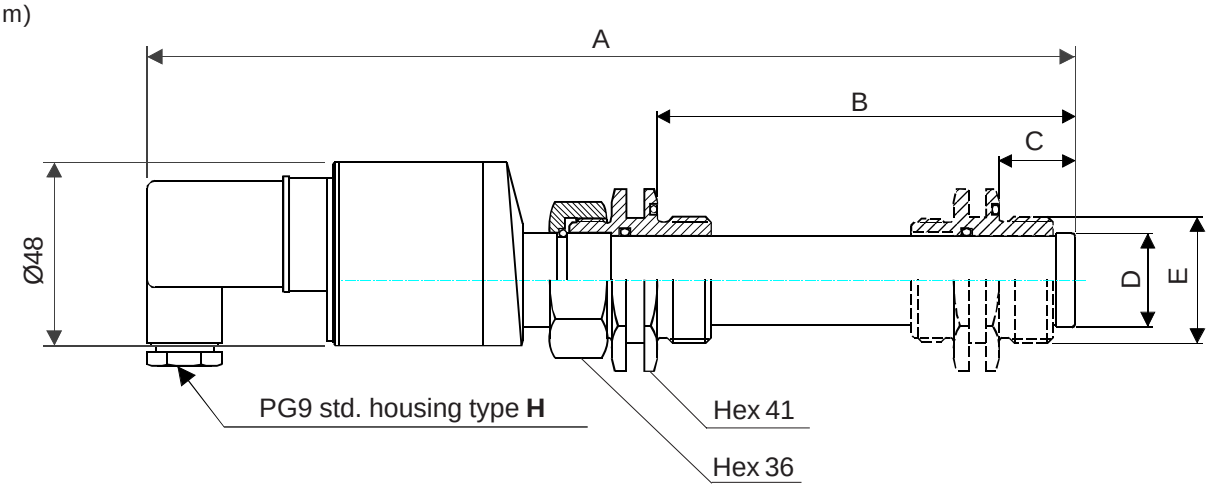

Process connection code	Dim. A	Dim. B	Dim. C	Dim. D	Thread E
1	228	109	20	Ø24.5	G1A

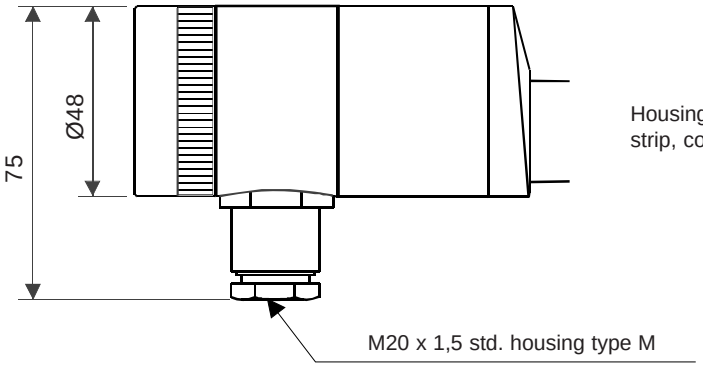

Housing with junction box/terminal strip, code M

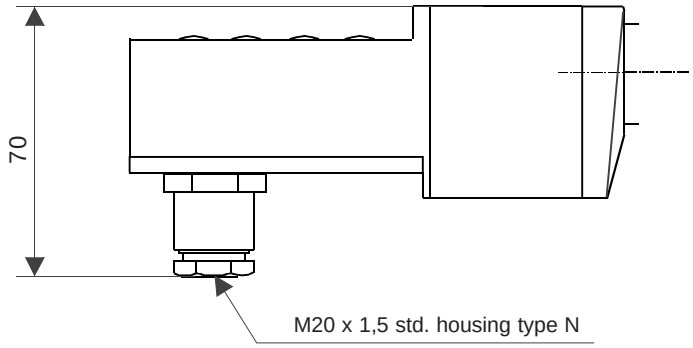

Housing with junction box/terminal strip, with display, code N

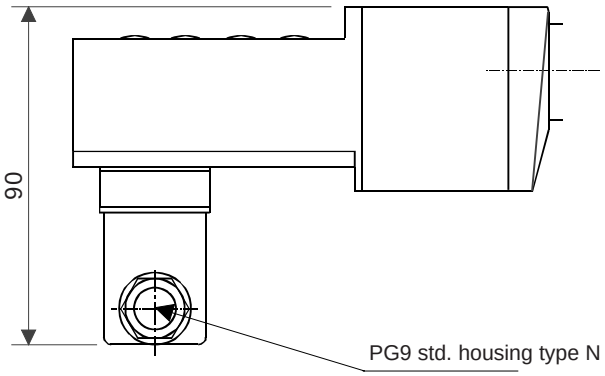

Housing with junction box/terminal strip, with display and plug-connector DIN 43650, code N--- /-P

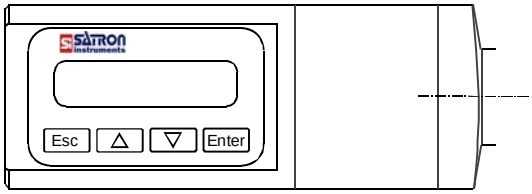

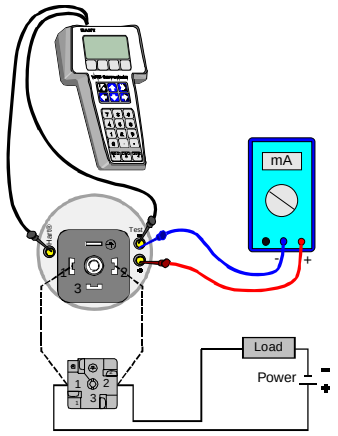

Wiring
Housing with PLUG connector, code **H**

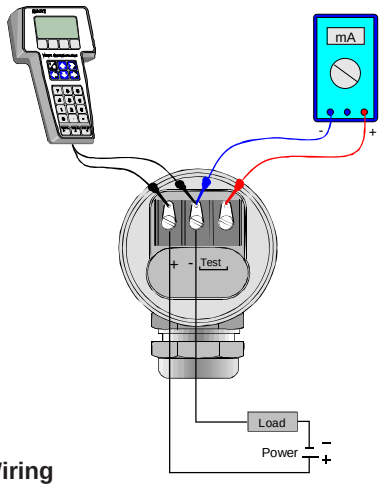

Wiring
Housing with terminal strip, code **M**

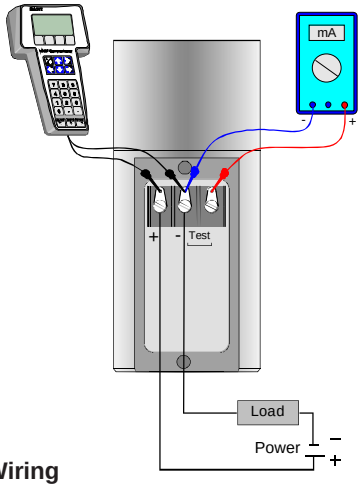

Wiring
Housing with terminal strip, code **N**

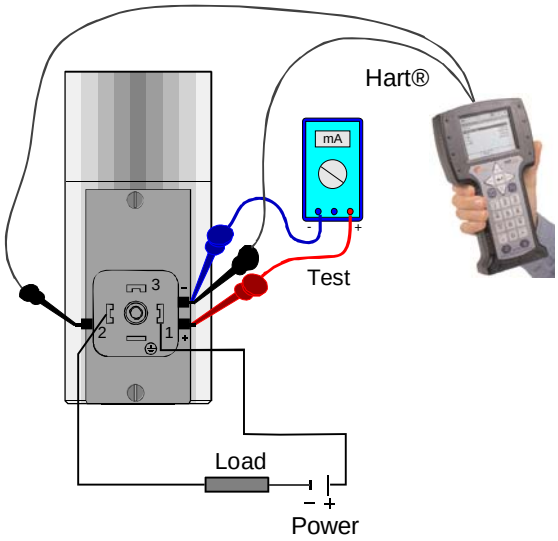

Wiring housing N **with plug DIN 43650, code N- / P**

Satron SI-Tool$_e$
Order code : M1330001

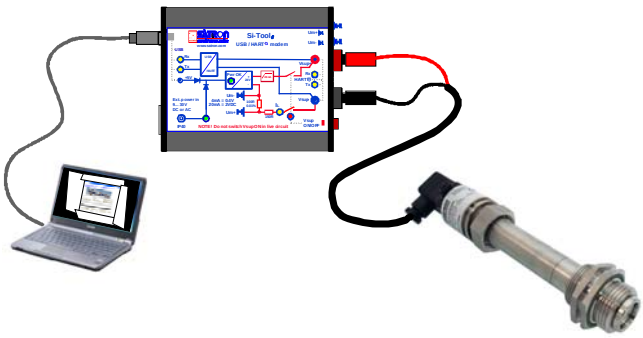

Connection with Satron SI-Tool$_e$
USB-HART® modem

Selection Chart

Adjustability	Span, min	Span, max	Measuring range
VB 4	4 kPa (40 mbar)	100 kPa (1000 mbar)	-100...+100 kPa (-1000...1000 mbar)
VB 5	10 kPa (100 mbar)	500 kPa (5000 mbar)	-100...+500 kPa (-1000...5000 mbar)
VB 6	0.03 MPa (0.3 bar)	3 MPa (30bar)	-0.1...+3 MPa (-1...+30 bar)

Output **S** 4-20mA DC/HART®

Process connection
1 Thread G1A, extension diameter Ø24.5 mm, extension length 109 mm

Wetted materials

Body		Diaphragm	
Code	Material	Code	Material
2	AISI316L (EN 1.4404)	**2**	AISI316L (EN 1.4435)

Fill fluid **S** Silicone oil **G** Inert oil (*)

Housing type
H Housing with PLUG-connector, DIN43650, no display, inlet PG9
M Housing with junction box/terminal strip, no display, inlet M20x1,5
N Housing with junction box/terminal strip, with display, inlet M20x1,5

Explosion proof **0** No explosion proof classification **1** Atex Intrinsic Safety, Ex II 1 GD T135°C (**)

□□□□□□□ / □ / □□□

Special size of electrical inlet
N 1/2 NPT **G** Pg13,5 **P** PLUG connector, DIN43650

Documentation
Calibration certificate **AE** English

Installation and operating instructions **IE** English **IF** Finnish

Material certificates
O No material certificate
MC1 Raw material certificate without appendices, in accordance with SFS-EN 10204-2.1 (DIN 50049-2.1) standard
MC2 Raw material certificate for wetted parts with appendices, in accordance with SFS-EN 10204-2.2 (DIN 50049-2.2) standard
MC3 Raw material certificate for wetted parts with appendices, in accordance with SFS-EN 10204-3.1 B (DIN 50049-3.1 B) standard

(*) = Oxygen cleaning must be mentioned in the order

(**) = Kotelointi H ja N : Ex II 2 GD T135°C

Satron Instruments Inc.
P.O.Box 22, FI-33901 Tampere, Finland
Tel. +358 207 464 800, Fax +358 207 464 801
www.satron.com

We reserve the right for technical modifications without prior notice.