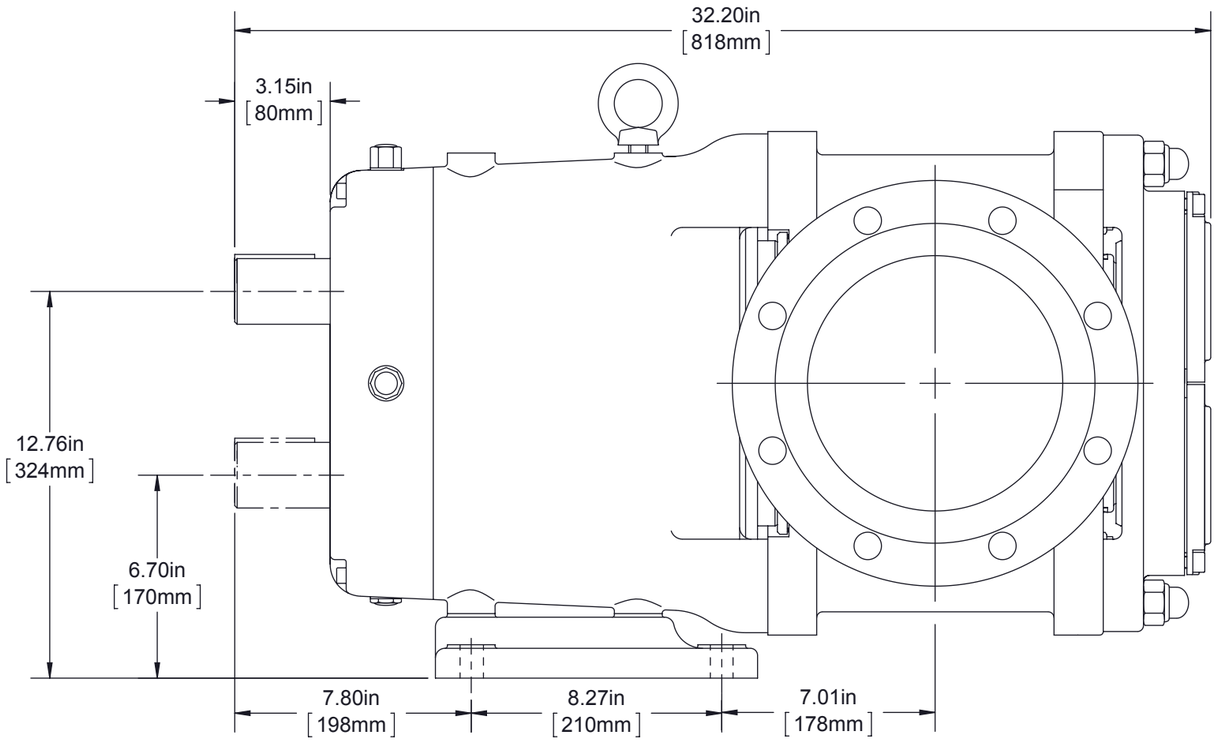

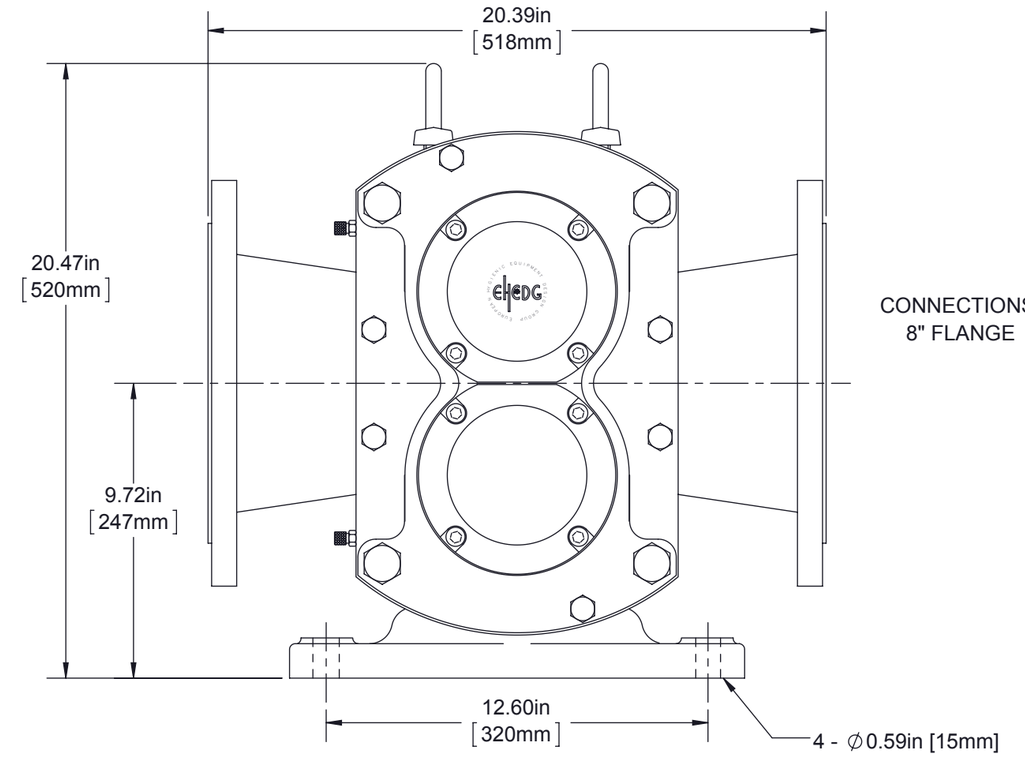

CONNECTIONS:
8" FLANGE

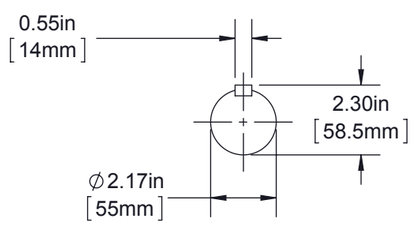

METRIC X STANDARD
SHAFT COUPLINGS
IN STOCK

DIXON
The Right Connection™

DIXON SANITARY
N25 W23040 PAUL RD
PEWAUKEE, WI 53072
(800) 789-1718

JRZF580

DIMENSIONAL DRAWING

THIS DRAWING AND THE INFORMATION CONTAINED THERE ON IS THE EXCLUSIVE PROPERTY OF DIXON SANITARY AND MAY NOT BE COPIED OR MODIFIED WITHOUT OBTAINING WRITTEN PERMISSION

ALL UNITS IN INCHES UNLESS OTHERWISE SPECIFIED

MATERIAL:
SCALE: 1:5
SHEET: 1 OF 2

SIZE: B